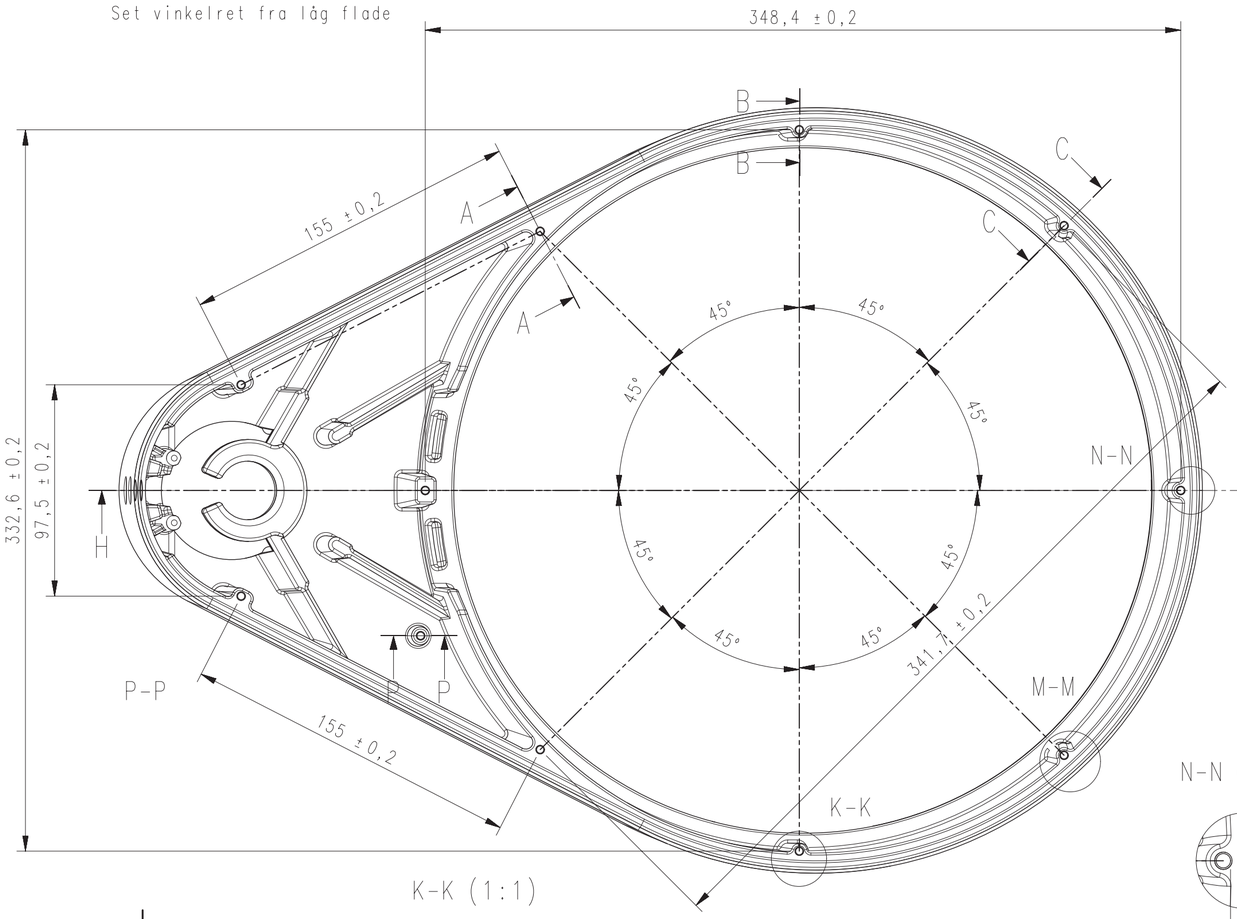

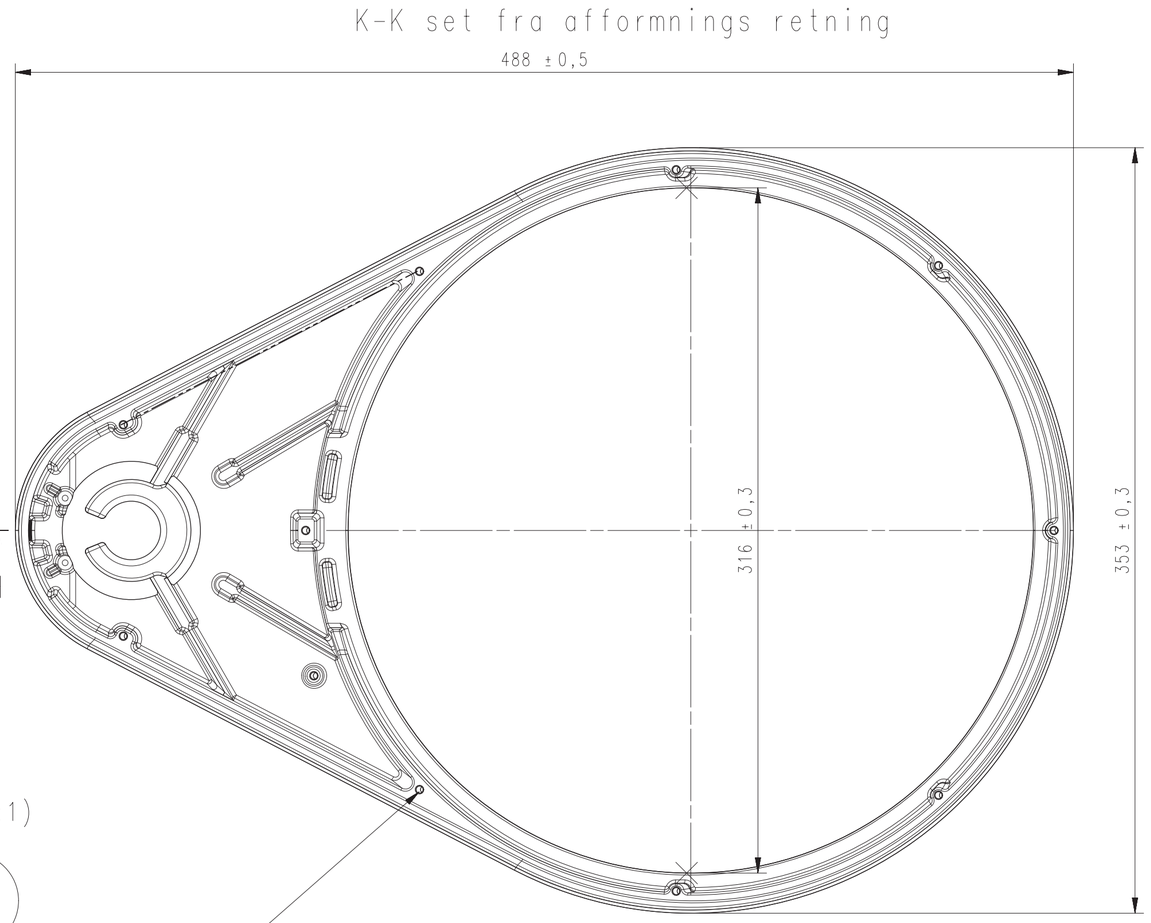

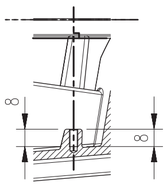

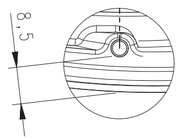

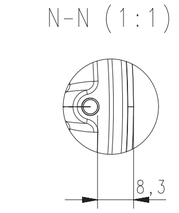

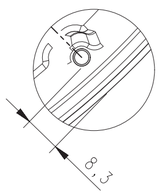

10 Stk M4 x12mm

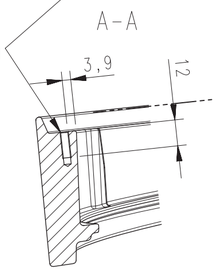

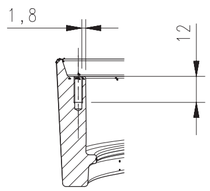

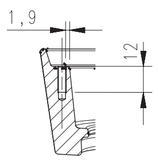

材料: AlSi12(Fe)
去毛刺
未注公差:ISO2768-mk
未注螺纹公差为
ISO965-1:1998（6H/6g）
线性公差见下表
铸件原始表面粗糙度为Ra1.6
未注尺寸见3D图
成品符合Rohs标准

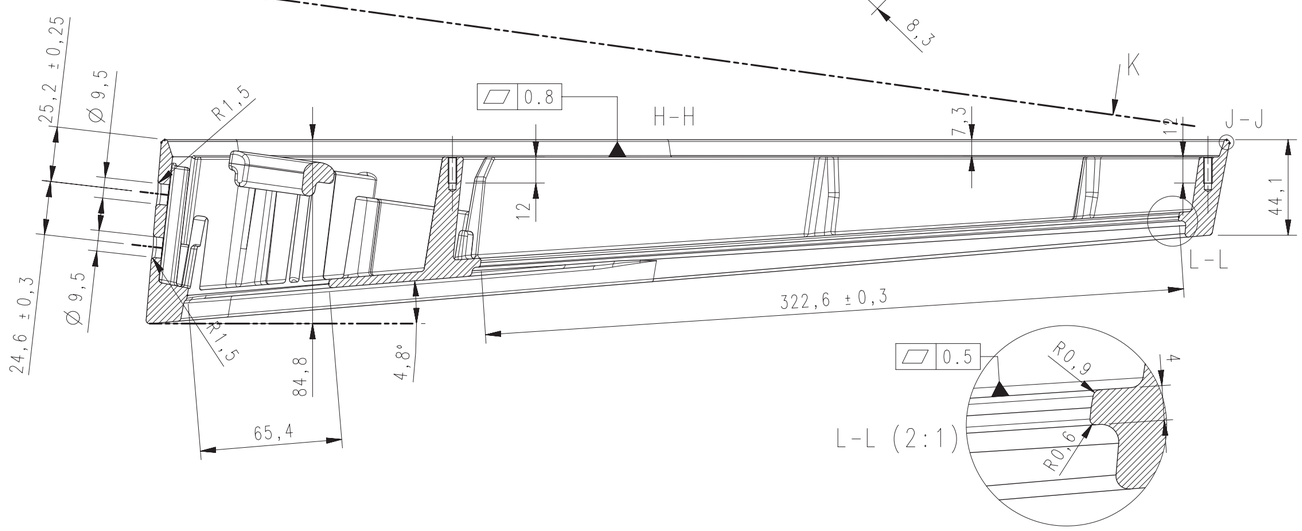

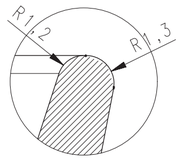

Dimensions that are not indicated specifically in this drawing must be found in the 3D-model (.stp, .igs or similar).

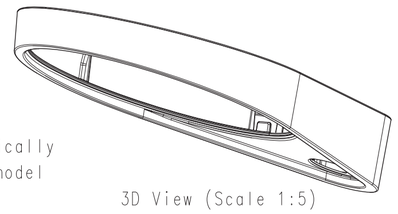

3D View (Scale 1:5)

RAW

Ra 1.6

DATE OF CHANGE	THE CHANGE INCLUDES	CHANGED BY
13-12-2016	Detaljeret for Emnetilbud	bdc.dk

DK-TITLE: ARMATURHUS, LP Capsule

UK-TITLE:

MATERIAL: Alu EN AC-44300

DATE: 08-09-2016

MILLIMETERS
DO NOT SCALE THIS DRAWING
FIRST ANGLE PROJECTION

TOLERANCES: Specific tolerances in drawing overrule general. Thread tolerances according to ISO 965-1:1998 (6H/6g). Angular and Geometrical tolerances according to ISO 2768-mK. Linear tolerances as indicated below.

Dim. over	0	6	30	100	300	1000
up to	6	30	100	300	1000	–
☒	±0,1	±0,2	±0,3	±0,5	±0,8	±1,0
☐	±0,3	±0,5	±0,8	±1,0	±1,5	±2,0
☐	±0,8	±1,0	±1,5	±2,0	±2,5	±3,0

WEIGHT:	DRAWN BY	SCALE
2.51kg	bdc.dk	1:1
DRAWING NO., VER NO.		SHEETS
50010-D1, 10		1

A2